HQMAG

Security & Safety, Our priority

User's manual
Manuel d'installation
Manual de instalación
Nutzerhandbuch
Manuale utente
Gebruikershandleiding
دليل الإستخدام و التركيب

HQMAG 11
HQMAG 12
HQMAG 1H
HQMAG 30S
HQMAG 4000HS
HQMAG 2000NF3
HQMAG 4000NF3
HQMAG 3500 & HQMAG 5700
HQMAG 3500++ & HQMAG 5700++
HQMAG 5700D

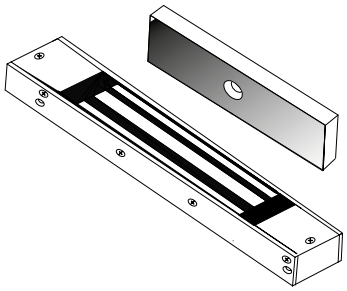

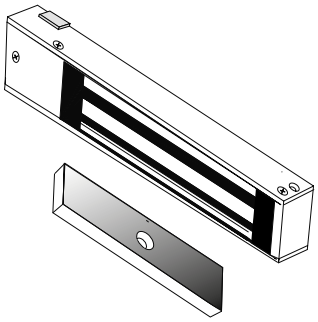

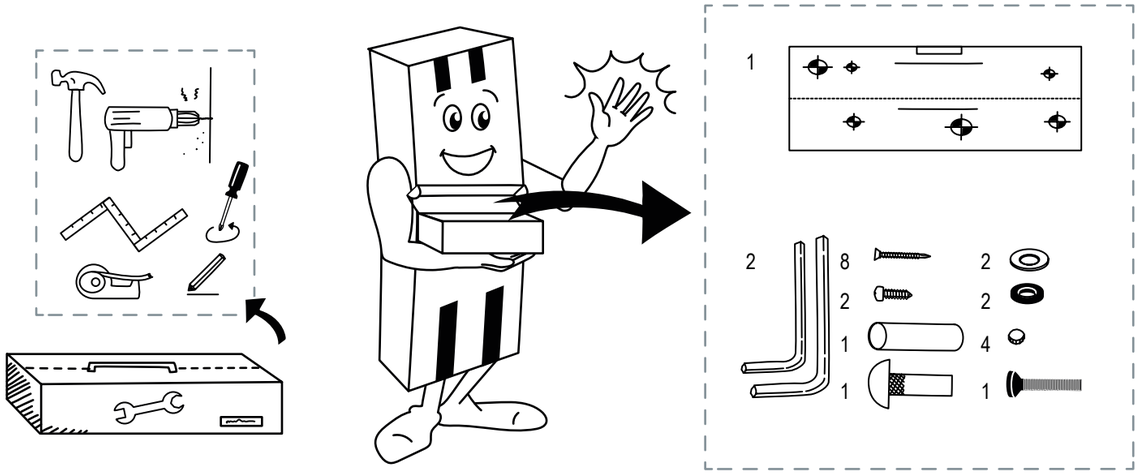
1
2
8
2
1
1
2
2
4
1

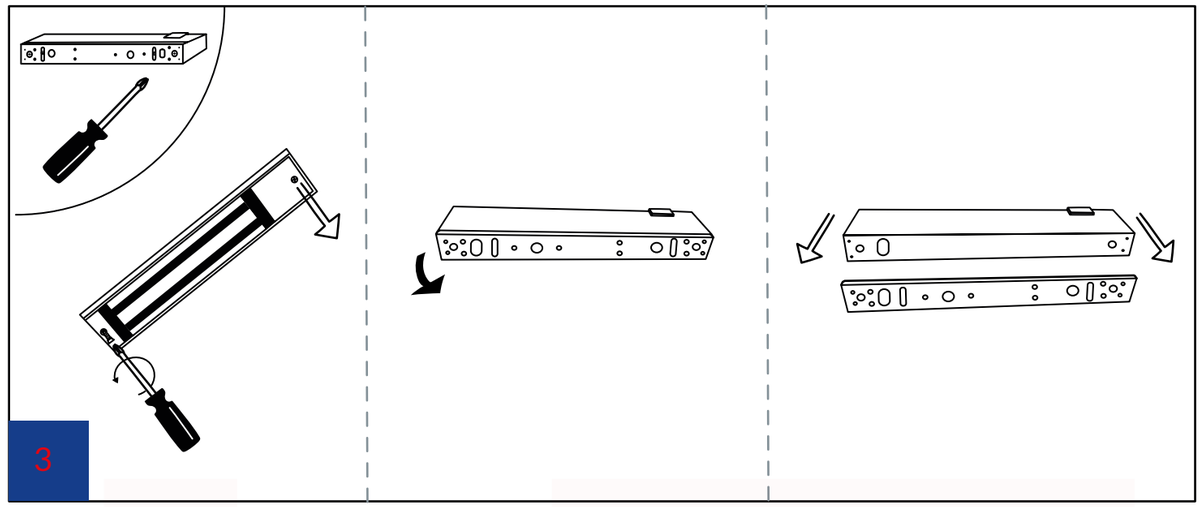
3

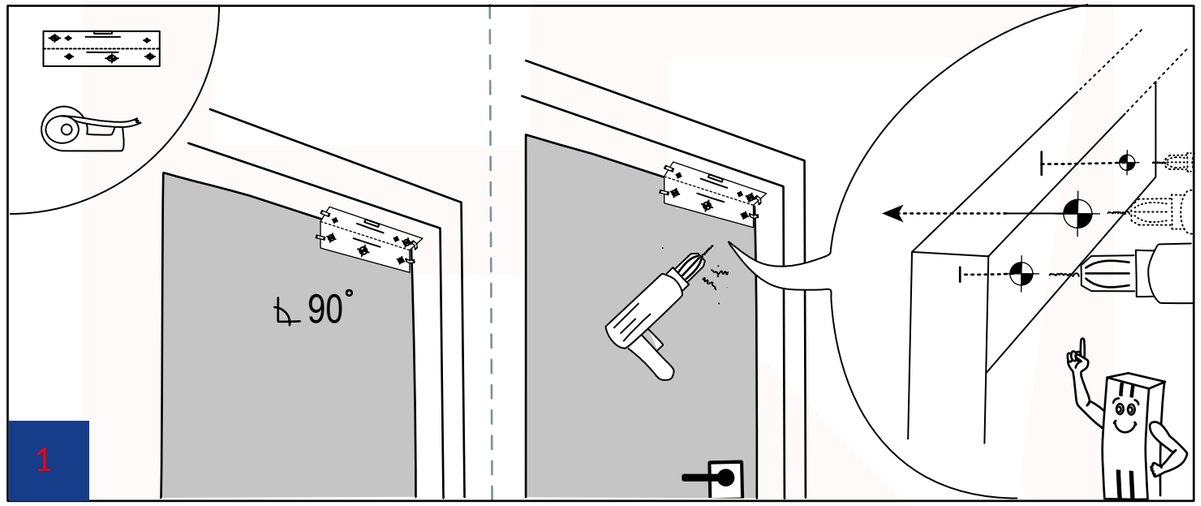
90°
1

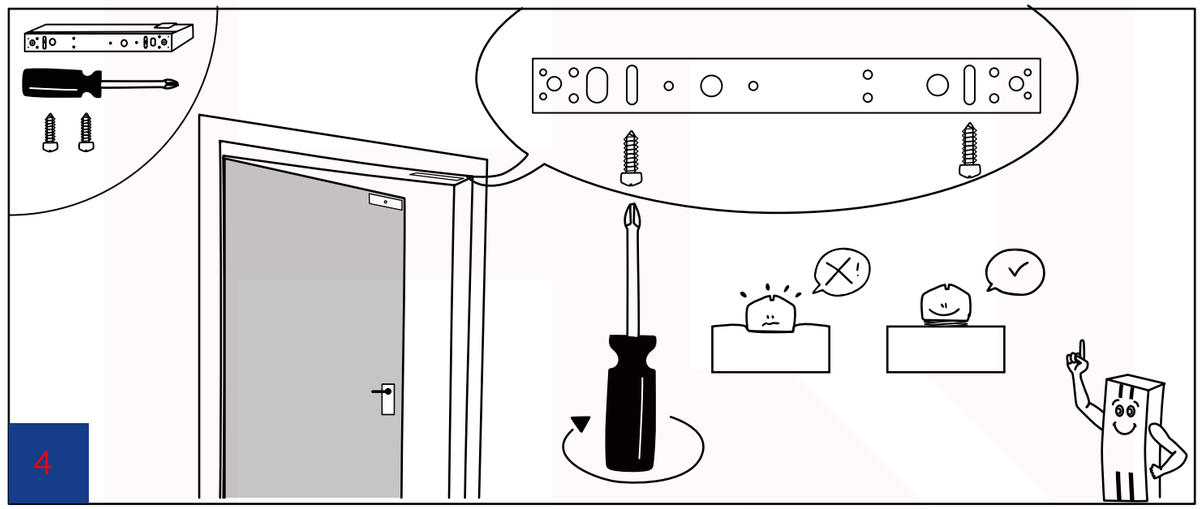
4

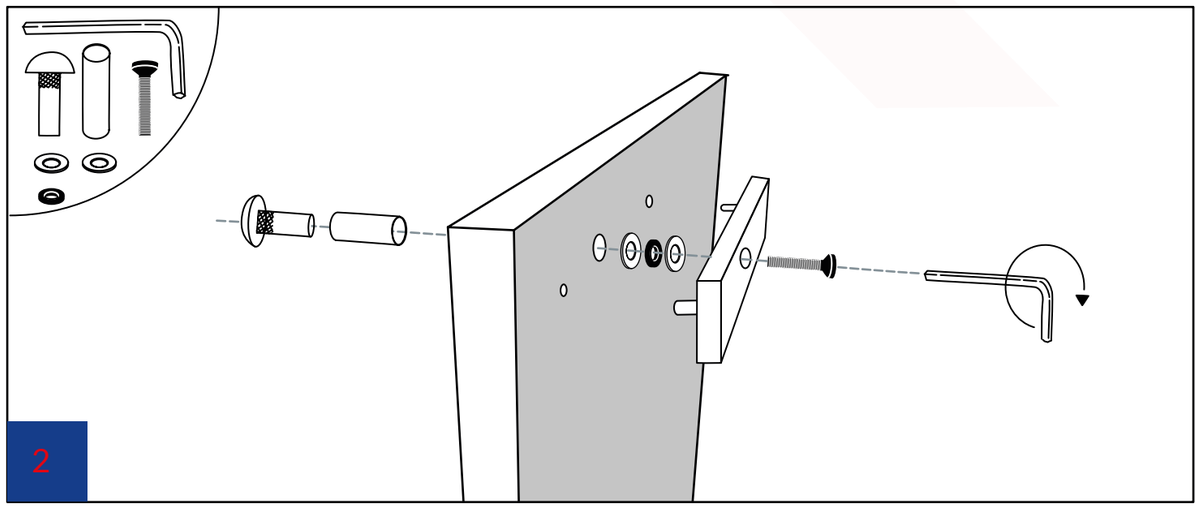
2

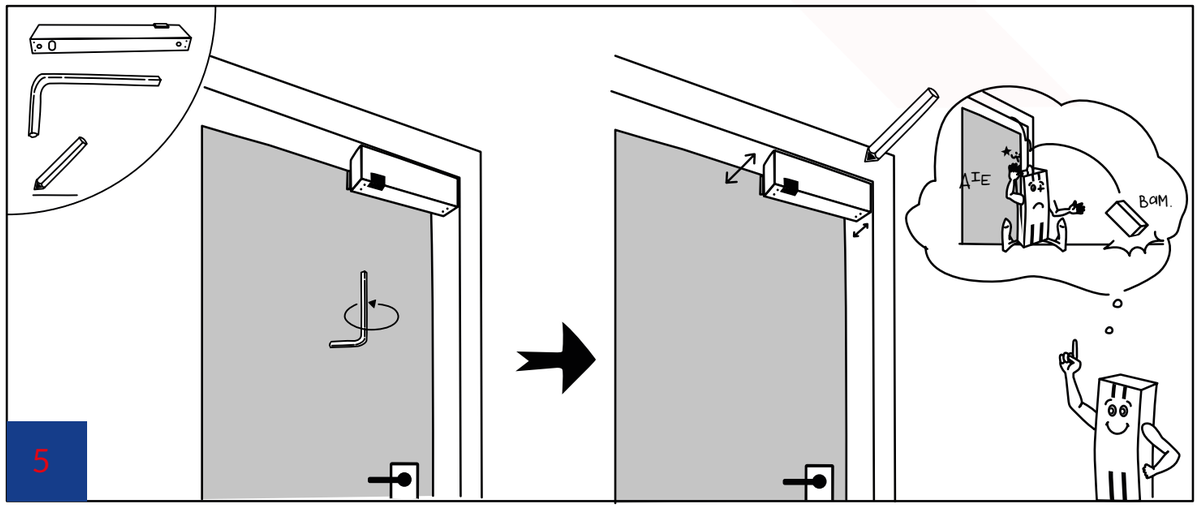
AIE
BOM.
5

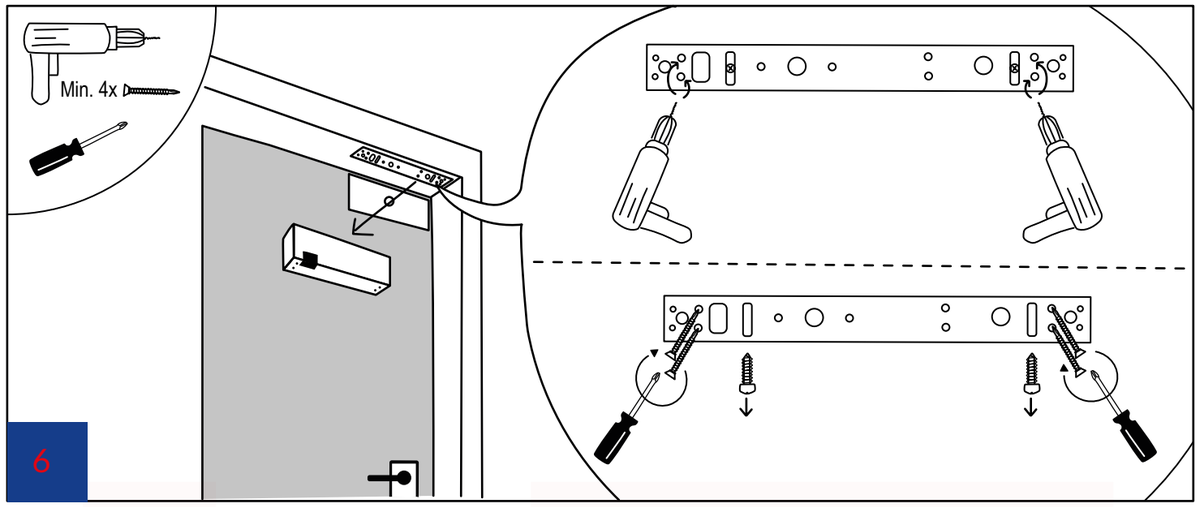
Min. 4x
6

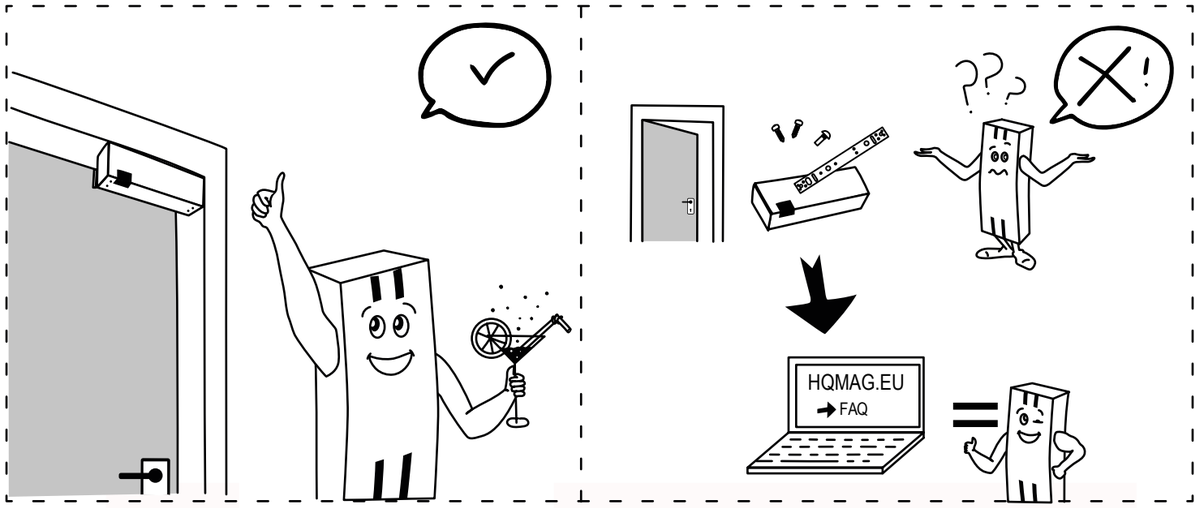
HQMAG.EU
FAQ

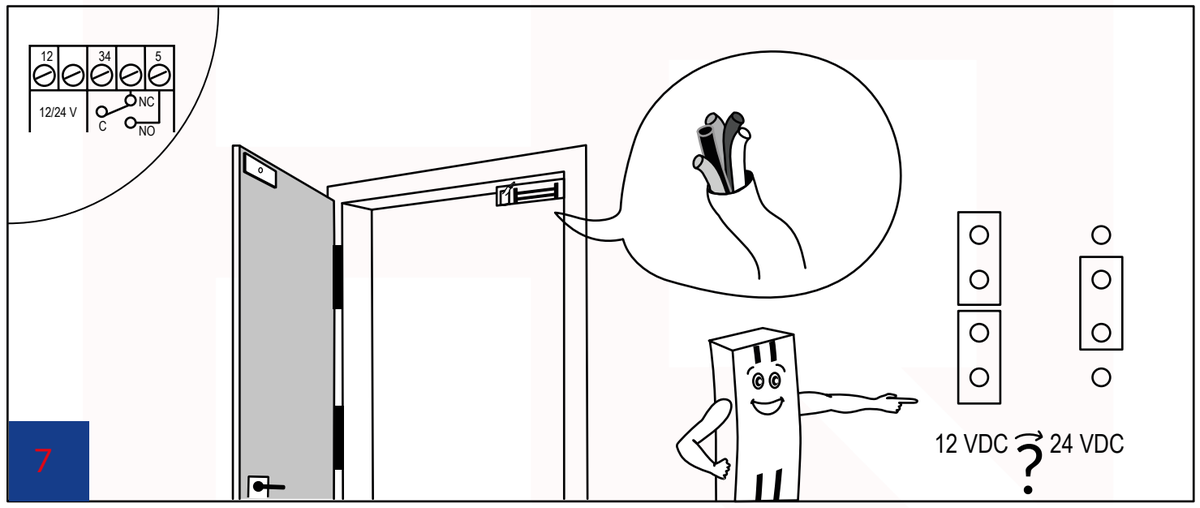
12
34
5
12/24 V
NC
C
NO
12 VDC
24 VDC
7

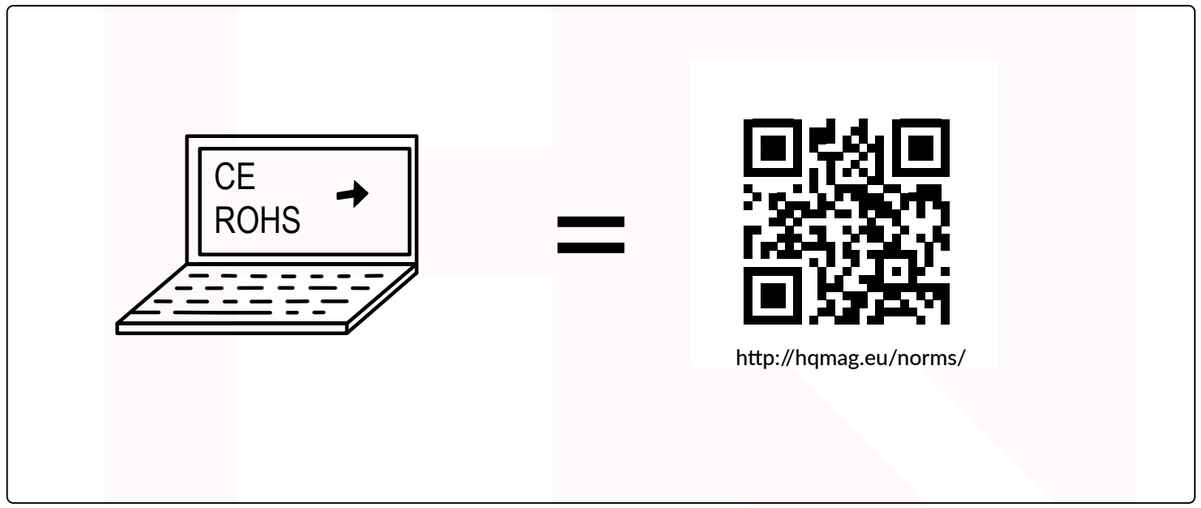
CE
ROHS
http://hqmag.eu/norms/

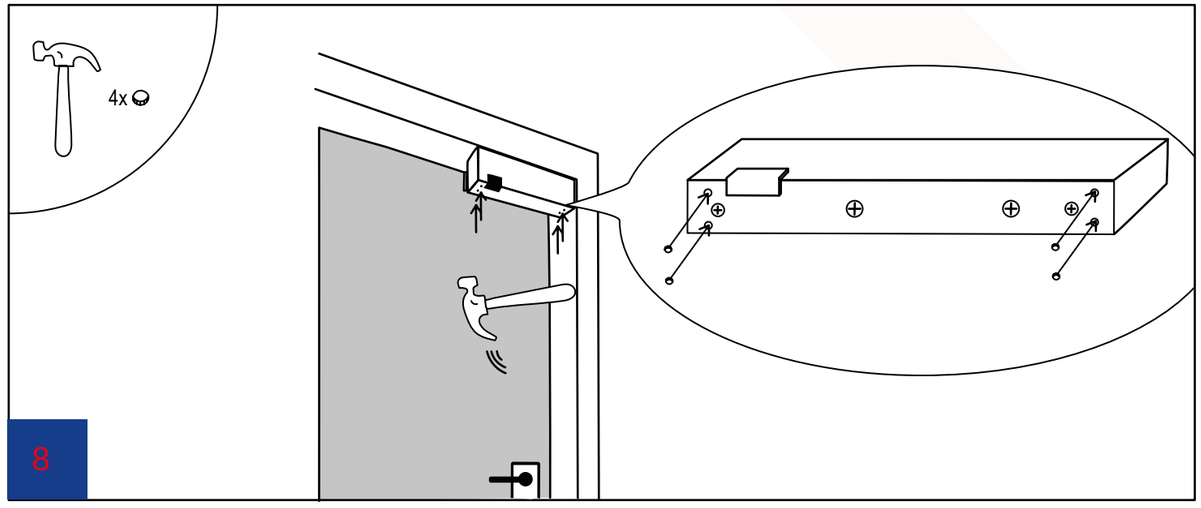
4x
8

HQMAG 11
HQMAG 12

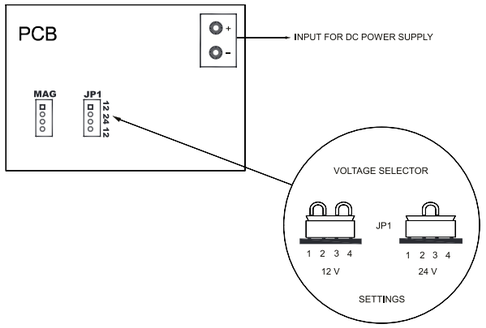

HQMAG 1H

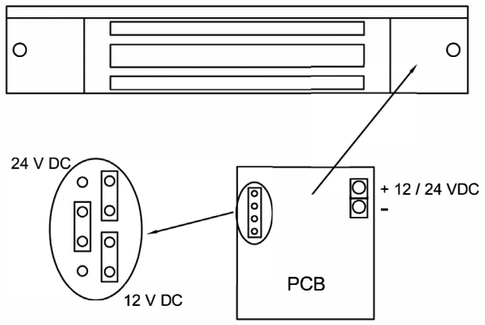

HQMAG 30S

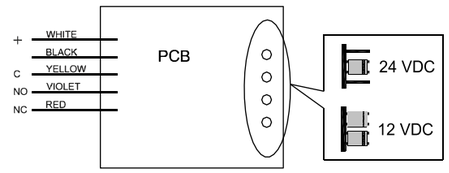

HQMAG 5700D

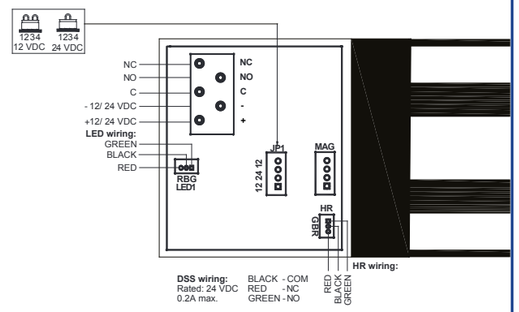

HQMAG 3500
HQMAG 3500++

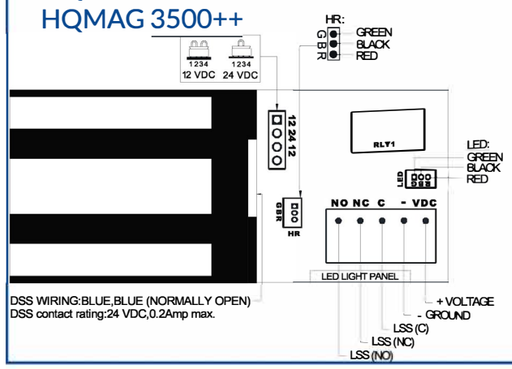

HQMAG 5700
HQMAG 5700++

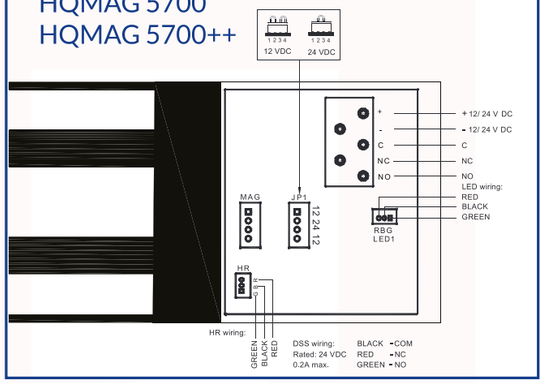

HQMAG 2000NF3

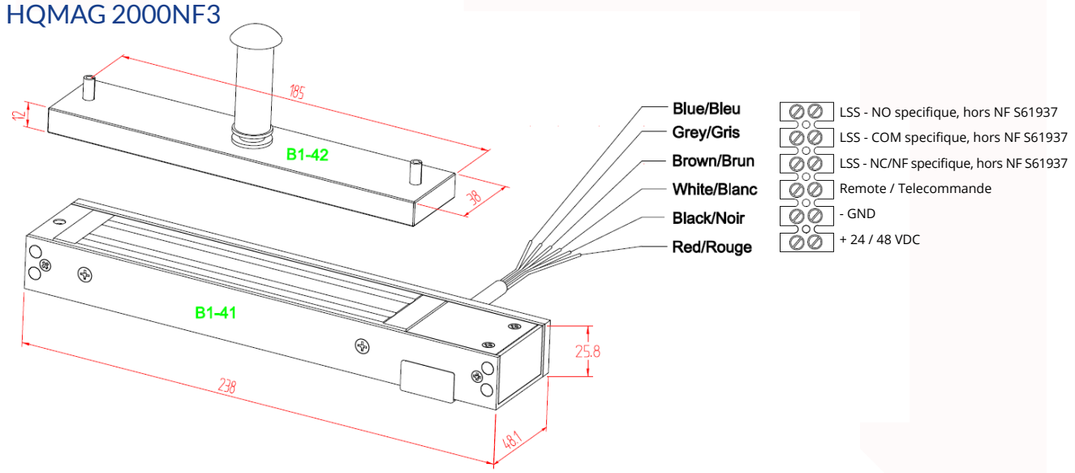

HQMAG 4000HS

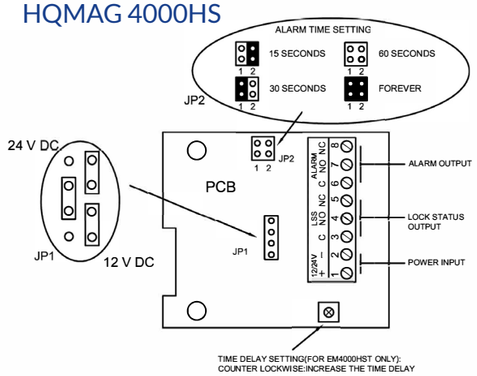

HQMAG 4000NF3

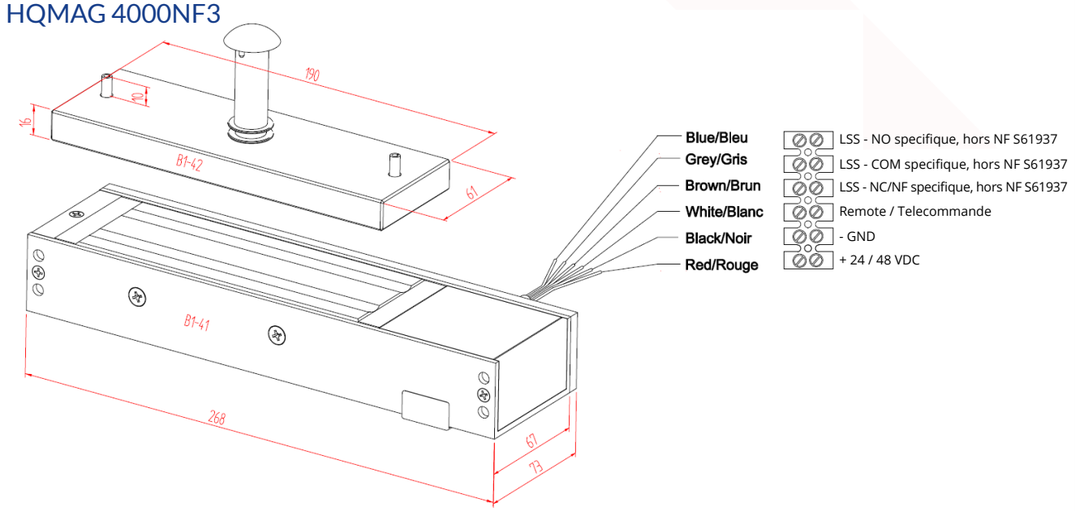

HQMAG surface range_manual_v3.3.1